0 603 275 103

Stand ~~00-06-07~~
Issue 00-08-14

Fig./Abb. 1

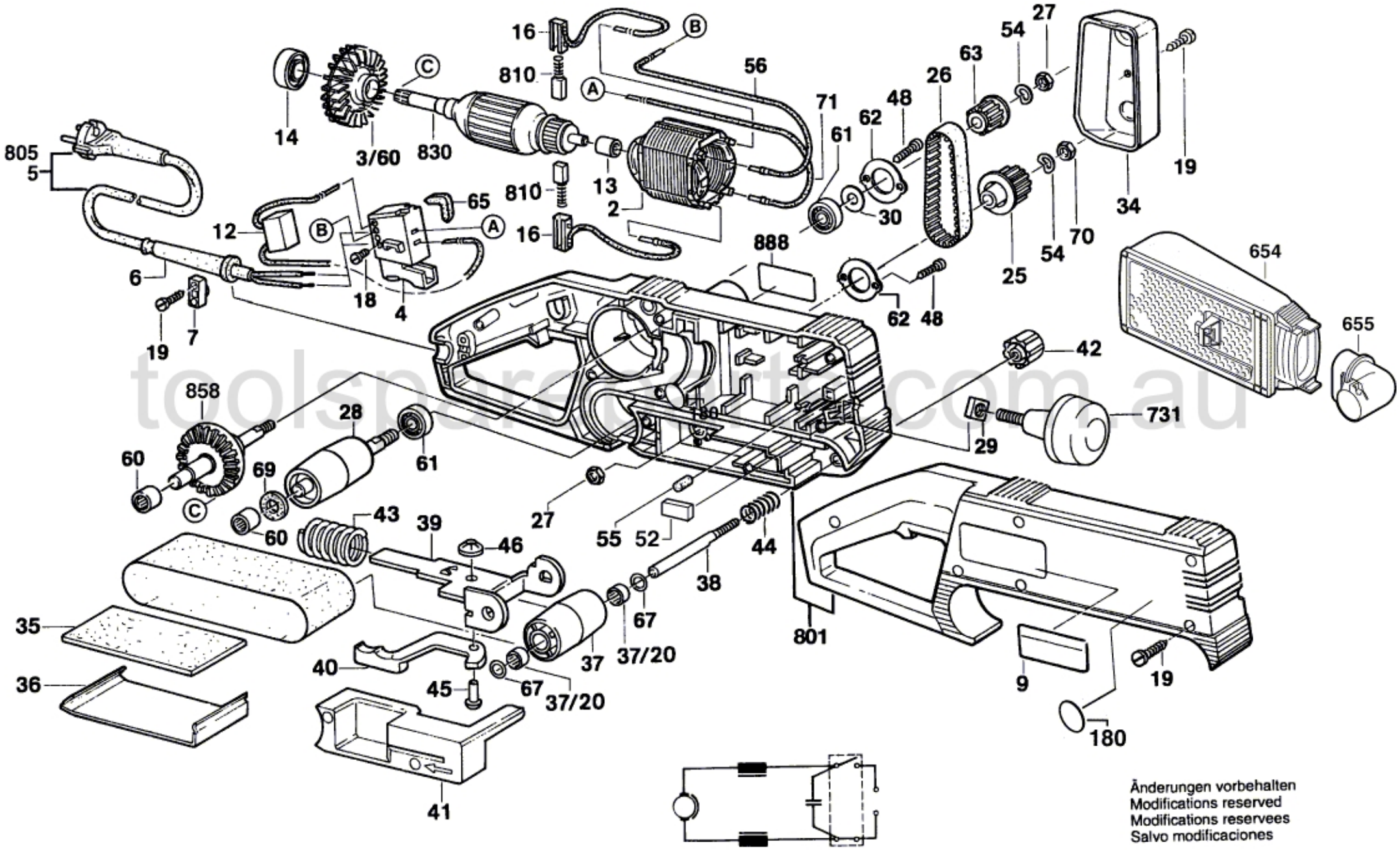

toolspareparts.com.au

Änderungen vorbehalten
Modifications reserved
Modifications reservees
Salvo modificaciones